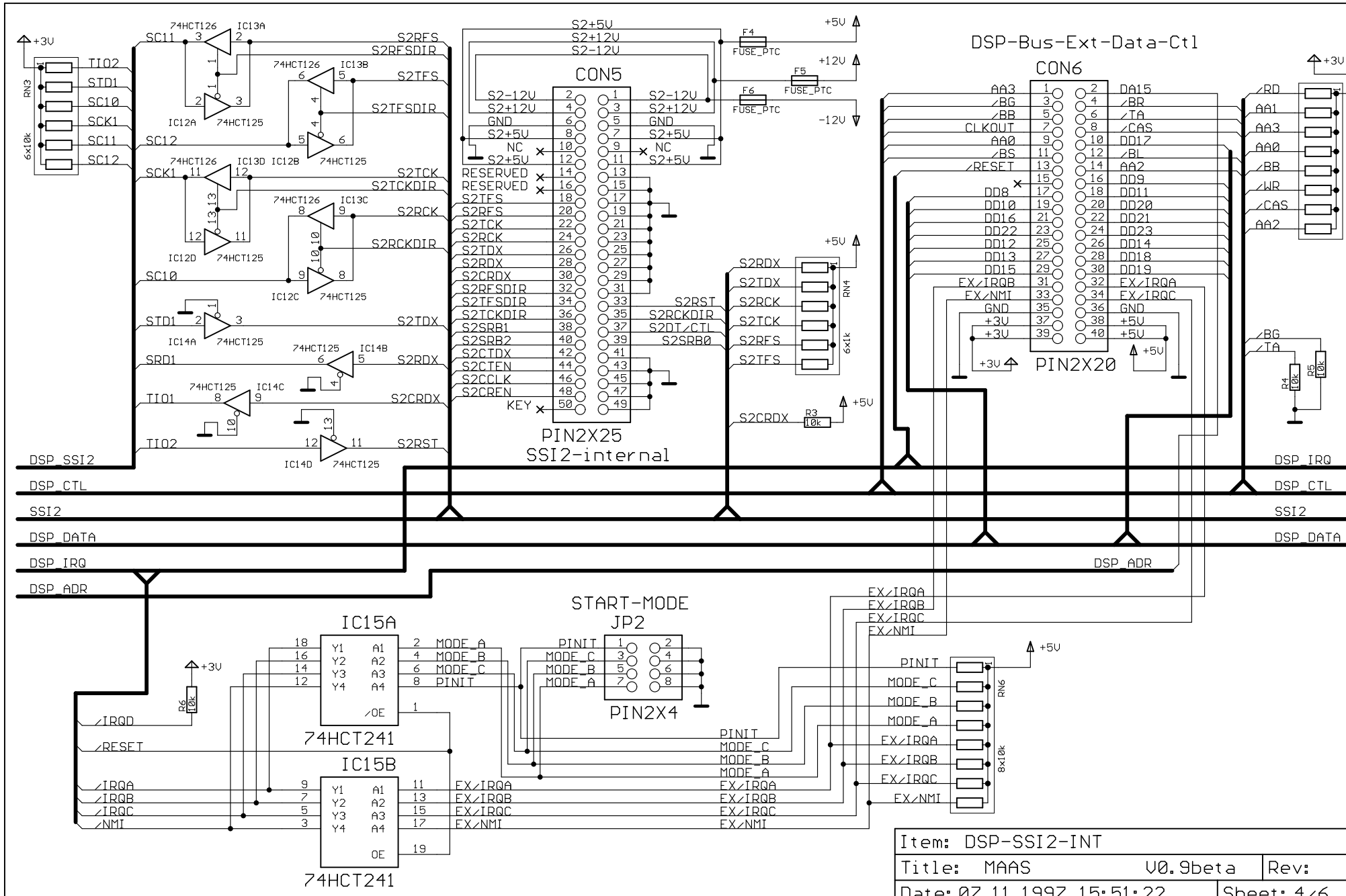
DSP-Bus-Ext-Data-Ctl
CON6
PIN2X20
CON5
PIN2X25
SSI2-internal
START-MODE
JP2
PIN2X4
IC15A
74HCT241
IC15B
74HCT241
DSP_SSI2
DSP_CTL
SSI2
DSP_DATA
DSP_IRQ
DSP_ADR
Item: DSP-SSI2-INT
Title: MAAS
V0.9beta
Rev:
Date: 07.11.1997 15:51:22
Sheet: 4/6